FOR US, THIS IS
MAKING EXCELLENCE SOFT.

GELMATIC
Making Excellence Soft

We always
look ahead,
without forgetting
the “**here and now**”.



Perfect machines and a **human touch**. Welcome to the **Soft Serve Culture**.

In the quest for **soft serve perfection**, Gelmatic leads the way. From cutting-edge technology to exquisite taste, our goal is to set the standard for **excellence** and make it **accessible** to everyone.

Simplicity is at the heart of everything we do: our machines are designed to be intuitive, ensuring maximum efficiency with minimal waste. It's not just innovation— it's an investment in our clients' success and, consequently, in customer satisfaction.

As Italians, we carry with us a tradition of **quality and attention to detail**, speaking a universal language of functionality and elegance. Each model we produce combines design, advanced technology, and a **human touch**. We create more than machines— we build true and **reliable business partners**.

When technology drives the process and simplicity paves the way, perfection is not just a goal— it's the final destination. That's why we can say: **Making Excellence Soft**.

STANDARD RANGE

COUNTERTOP | COMPACT 2 FLAVORS | HIGH PRODUCTIVITY 2 FLAVORS | ETOILE

Easy-to-use excellence is our **standard**.

The Standard range features top-loading machines that combine an **intuitive system** with **advanced technologies**: the refrigerated hopper maintains the mix at +4°C, while the agitator ensures a smooth, uniform viscosity. Available with **gravity feed** or **gear pump**, these machines offer great **versatility** and adapt to any business need through user-friendly operation. With a simple gesture, you get excellent fruit- or milk-based soft serve, reducing waste and maximizing efficiency through continuous mixing and freezing directly in the freezing cylinder.







SINGLE FLAVOR COUNTERTOP

Excellence
in every swirl.

The single-flavor countertop machines are available with three different freezing cylinder capacities (1.7 - 2.6 - 3.5 liters) to meet any production need. Easy to position, they **adapt to any business**.

PRODUCTS:

Soft Serve

Frozen Yogurt



Models:
BC EASY 1, BC 151 HT, MC EASY 1, MC 153 HT, HC EASY 1

Excellence in every detail

- **Advanced control systems**
  INCODIS 2.0, with a 7" touchscreen, or ECOS, with a capacitive LCD display.
- **Cylinder feed**
  Gravity or gear pump feeding for excellent results for any desired product type.
- **Hoppers**
  Refrigerated hoppers with capacities ranging from 10 to 22 liters to meet every production need, equipped with an integrated level sensor.
- **Integrated agitator**
  Keeps the mix uniform by preventing the separation of the solid and liquid parts.
- **High-efficiency stainless steel freezing cylinders**
  Direct expansion freezing cylinders for fast, non-stop production cycles, guaranteeing maximum efficiency.
- **Photocell for smart dosing**
  Automatic recognition of cones or cups.
- **Modern and compact design**
  Elegant lines and space-saving dimensions, designed to fit any environment and ensure comfortable dispensing.

		BC EASY 1	BC 151 HT	MC EASY 1	MC 153 HT	HC EASY 1
TECHNICAL SPECIFICATIONS						
Number of flavors		1	1	1	1	1
Control system	ECOS	•		•		•
	INCODIS 2.0		•		•	
Freezing cylinder feed	Gravity	•		•	•	
	Pump	•	•	•	•	•
Heat Treatment			•		•	
Size (h x w x d)		815 x 456 x 688 mm	815 x 456 x 688 mm	867 x 450 x 796 mm	867 x 450 x 796 mm	867 x 450 x 837 mm
Weight		109 kg	121 kg	149 kg	147 kg	151 kg
Hopper capacity	Gravity	11.5 L		18 L	18 L	
	Pump	9.8 L	9.8 L	15.5 L	15.5 L	22 L
Freezing cylinder capacity		1.7 L	1.7 L	2.6 L	2.6 L	3.5 L
PRODUCTIVE CAPACITY*						
Hourly production capacity		22 kg	22 kg	27 kg	27 kg	33 kg
POWER SUPPLY						
Phase		1~	1~ - 3~	1~ - 3~	1~ - 3~	1~ - 3~
Hertz		50 - 60 Hz	50 - 60 Hz	50 - 60 Hz	50 - 60 Hz	50 - 60 Hz
Power		2650 W	2700 W	3050 W	3150 W	3700 W
REFRIGERATION SYSTEM						
Cooling	Air	•	•	•	•	•
	Water	•	•	•	•	•
Number of compressors		1 x Hermetic	1 x Hermetic	1 x Hermetic	1 x Hermetic	1 x Hermetic

*Production capacity can be affected by ambient temperature, the mix used, and machine settings. The information provided is general; therefore, the specific release details should be verified. The manufacturer reserves the right to modify the specifications without prior notice.

COMPACT **TWIN FLAVOR**

Double
your opportunities.

Compact, efficient, and versatile: these twin-flavor machines deliver high performance with independent control of hoppers and freezing cylinders, thanks to four separate cooling circuits powered by a single compressor and two agitators.
Double opportunities in a limited space.

PRODUCTS:

Soft Serve

Frozen Yogurt



Models:
BC EASY 2, BV EASY 2

Excellence in every detail

- **User-friendly control system**
  ECOS, with a capacitive LCD display for intuitive operation.
- **Freezing cylinder feed**
  Gravity or gear pump feeding to deliver excellent results for any desired product type.
- **Double stainless-steel hoppers**
  Two refrigerated hoppers with level sensors, each with a capacity of up to 11.5 liters.
- **Integrated agitator**
  Keeps the mix uniform by preventing the separation of the solid and liquid parts.
- **High-efficiency stainless steel freezing cylinders**
  Direct expansion freezing cylinders for fast, non-stop production cycles, guaranteeing maximum efficiency.
- **Independent cooling system**
  Four independent cooling circuits for precise control of each hopper and cylinder.
- **Photocell for smart dosing**
  Automatic recognition of cones or cups.
- **Modern and compact design**
  Elegant lines and space-saving dimensions, designed to fit any environment and ensure comfortable dispensing.

		BC EASY 2	BV EASY 2
TECHNICAL SPECIFICATIONS			
Number of flavors		2+1 mix	2+1 mix
Control system	ECOS	•	•
Freezing cylinder feed	Gravity	•	•
	Pump	•	•
Size (h x w x d)		850 x 530 x 774 mm	1483 x 555 x 774 mm
Weight		176 kg	192 kg
Hopper capacity	Gravity	2 x 11.5 L	2 x 11.5 L
	Pump	2 x 9.8 L	2 x 9.8 L
Freezing cylinder capacity		2 x 1.7 L	2 x 1.7 L
PRODUCTIVE CAPACITY*			
Hourly production capacity		31 kg	42 kg
POWER SUPPLY			
Phase		1~ - 3~	1~ - 3~
Hertz		50 - 60 Hz	50 - 60 Hz
Power		3600 W	3850 W
REFRIGERATION SYSTEM			
Cooling	Air	•	•
	Water	•	•
Number of compressors	1Ph	1 x Hermetic	1 x Hermetic
	3Ph	1 x Hermetic	1 x Semi-hermetic

*Production capacity can be affected by ambient temperature, the mix used, and machine settings. The information provided is general; therefore, the specific release details should be verified. The manufacturer reserves the right to modify the specifications without prior notice.

HIGH PRODUCTIVITY TWIN FLAVOR

Raise your standards.

These floor-standing twin-flavor machines are equipped with four separate cooling circuits powered by two compressors and two motors, ensuring independent control of each hopper and cylinder. Efficient and precise, **they are the ideal solution for elevated production capacities.**

PRODUCTS:

- Soft Serve
- Frozen Yogurt



Models:
BV 261 HT, MV EASY 2, MV 255 HT,
HV EASY 2

Excellence in every detail

- **Advanced control systems**
  INCODIS 2.0, equipped with a 7” touchscreen, or ECOS, with a capacitive LCD display.
- **Freezing cylinder feed**
  Gravity or gear pump feeding to deliver excellent results for any desired product type.
- **Double hoppers**
  Two hoppers, each equipped with a level sensor, with capacities ranging from 10 to 22 liter to suit every need.
- **High-efficiency stainless steel freezing cylinders**
  Direct expansion freezing cylinders for fast, non-stop production cycles, guaranteeing maximum efficiency.
- **Photocell for smart dosing**
  Automatic recognition of cones or cups.
- **Two independent cooling systems**
  Two compressors provide a completely independent control of the two flavors: it’s like having two machines in one. Plus, whenever possible, save time and energy by using just one side.
- **Modern and compact design**
  Elegant lines and space-saving dimensions, designed to fit any environment and ensure comfortable dispensing.

		BV 261 HT	MV EASY 2	MV 255 HT	HV EASY 2
TECHNICAL SPECIFICATIONS					
Number of flavors		2+1 mix	2+1 mix	2+1 mix	2+1 mix
Control system	ECOS		•		•
	INCODIS 2.0	•		•	
Freezing cylinder feed	Gravity	•	•		
	Pump	•	•	•	•
Heat Treatment		•		•	
Size (h x w x d)		1483 x 555 x 774 mm	1522 x 640 x 797 mm	1522 x 640 x 797 mm	1522 x 640 x 916 mm
Weight		243 kg	285 kg	305 kg	316 kg
Hopper capacity	Gravity	2 x 11.5 L	2 x 18 L		
	Pump	2 x 9.8 L	2 x 15.5 L	2 x 15.5 L	2 x 22 L
Freezing cylinder capacity		2 x 1.7 L	2 x 2.6 L	2 x 2.6 L	2 x 3.5 L
PRODUCTIVE CAPACITY*					
Hourly production capacity		42 kg	58 kg	58 kg	70 kg
POWER SUPPLY					
Phase		3~	3~	3~	3~
Hertz		50 - 60 Hz	50 - 60 Hz	50 - 60 Hz	50 - 60 Hz
Power		4500 W	5500 W	7000 W	6350 W
REFRIGERATION SYSTEM					
Cooling	Air	•	•	•	•
	Water	•	•	•	•
Number of compressors		2 x Hermetic	2 x Semi-hermetic	2 x Semi-hermetic	2 x Semi-hermetic

*Production capacity can be affected by ambient temperature, the mix used, and machine settings. The information provided is general; therefore, the specific release details should be verified. The manufacturer reserves the right to modify the specifications without prior notice.

ETOILE THREE FLAVORS

Concentrated functionality.

Etoile Gel Plus, thanks to its three freezing cylinders, offers a wide range of flavors and **combinations**, allowing you to serve soft ice cream, frozen yogurt, sorbets, or customized creations. The central freezing cylinder, designed with a higher production capacity, is ideal for the most popular flavors.
A high-performance machine with a space-saving design, **created to exceed every customer's experience.**

PRODUCTS:

Soft Serve

Frozen Yogurt

Models:
ETOILE GEL PLUS



Excellence in every detail

- **Many flavors, reduced space**
  Three flavors plus two mix combinations. Its compact size— only 70 cm wide— makes it ideal for businesses with limited space.
- **Control system**
  INCODIS 2.0, equipped with a 7" touchscreen.
- **Gear pump**
  Hopper feeding system with 100% stainless steel gear pumps. Designed for easy removal and cleaning, they ensure precise overrun control.
- **High-efficiency stainless steel freezing cylinders**
  Premium direct-expansion freezing cylinders that deliver enhanced performance, superior texture quality, fast production, and energy savings.
- **Ventilation**
  The air-cooled version is designed to expel heat upwards, allowing installation anywhere, even against walls.
- **Filter grids**
  Stainless steel filter grids, which are quick and easy to remove and ensure perfect cleaning.
- **Simplified dispensing**
  Self-closing handles and portion counters are included as standard.

		ETOILE GEL PLUS
TECHNICAL SPECIFICATIONS		
Number of flavors		3+2 mix
Control system	INCODIS 2.0	•
Freezing cylinder feed	Pump	•
Size (h x w x d)		1528 x 720 x 840 mm
Weight		318 kg
Hopper capacity		3x9.8 L
Freezing cylinder capacity		2 x 1.7 L (L-R), 2.2 L (C)
PRODUCTIVE CAPACITY*		
Hourly production capacity		70 kg
POWER SUPPLY		
Phase		3~
Hertz		50 - 60 Hz
Power		6300 W
REFRIGERATION SYSTEM		
Cooling	Air	•
	Water	•
Number of compressors		3 x Hermetic

*Production capacity can be affected by ambient temperature, the mix used, and machine settings. The information provided is general; therefore, the specific release details should be verified. The manufacturer reserves the right to modify the specifications without prior notice.

GIOTTO RANGE

GIOTTO 11 | GIOTTO 12 | GIOTTO 21 | GIOTTO DR 14

Every machine is a **partner**, not just a tool.

Giotto marks a new era in **Soft Serve** technology: a range of machines that combines a distinctive design with Gelmatic's technological excellence, ideal for products with different viscosities, temperatures, and overrun percentages. **Practical innovations**, such as the self-closing handles, ensure precise, waste-free dispensing. With four parameter presets and scheduled maintenance, the Giotto range offers top-level **performance and more efficient production**. Gelmatic also acts as a true **problem solver**, offering practical support at every stage to prevent problems and reduce operational downtime.

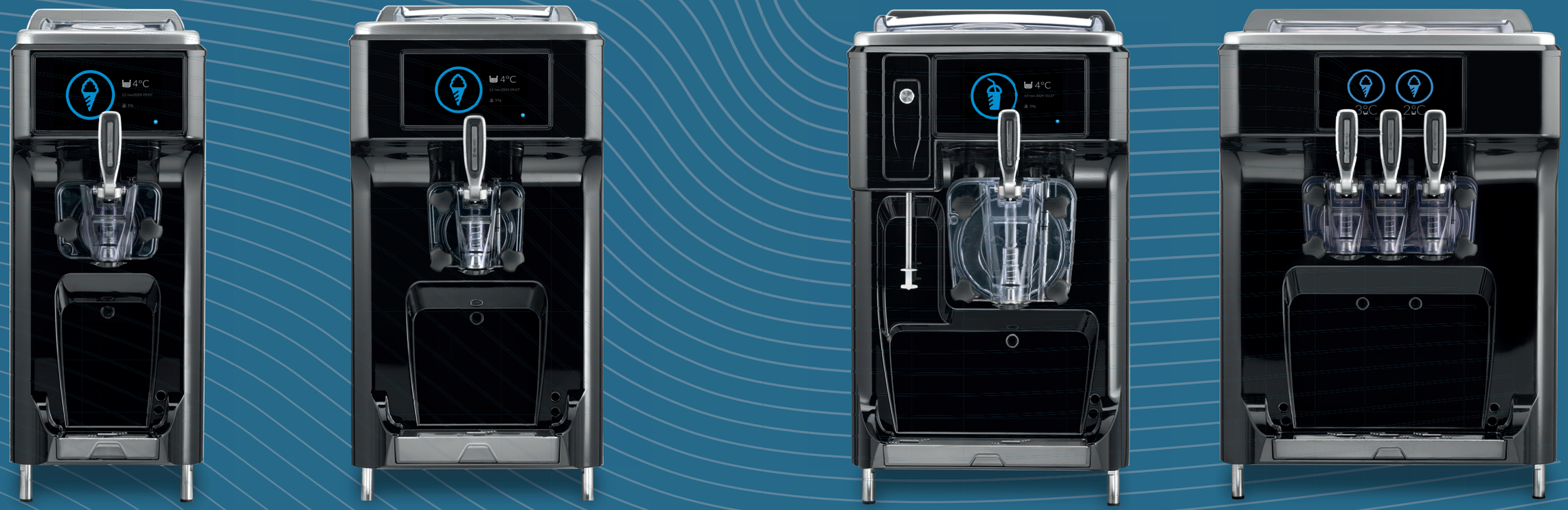

FOR **SOFT SERVE**

Versatility and technology at your fingertips.

The Giotto single and twin-flavor countertop machines are designed to fit effortlessly into any space. This range combines compact dimensions, advanced technology, and versatility to meet every production need. With just a simple tap on the touchscreen, you can choose from four presets that automatically adjust key parameters, such as viscosity and overrun. **Thoughtfully engineered to combine compactness, efficiency, and ease of use.**

PRODUCTS:

Soft Serve

Frozen Yogurt



Models:
GIOTTO 11, GIOTTO 12, GIOTTO 21

Excellence in every detail

- **Advanced interface**
  All models are equipped with the INCODIS 3.0 interface, with a 7" touchscreen and remote management. Thanks to the intuitive display, controlling all functions has never been easier, enabling you to monitor and adjust the machine's performance in real time.
- **Freezing cylinder feed**
  Depending on the desired viscosity and overrun, it is possible to choose between two feeding systems: gravity-fed, which uses the force of gravity to transfer the mix, or piston pump-fed, for more precise control of the overrun.
- **Smart placement**
  Ergonomic and space-saving, these models are designed to offer maximum versatility.
  The bottom-to-top airflow system allows installation even in tight spaces, while their compact size makes placement easy in any commercial establishment.
- **Video tutorials**
  The advanced control system provides complete support for proper use.
  Video tutorials on the machine's touchscreen guide the operator through each operational procedure, ensuring it is performed correctly and easily.
- **Hygiene standards**
  The Heat Treatment function, through a thermal cycle of the mix in both the freezing cylinder and the hopper, reduces bacterial load and extends the product's lifespan. The Health Protocol technology, exclusive to the Giotto range, detects any contamination and halts production, requiring either the thermal cycle or cleaning as needed.
- **Unique identity**
  Built with resistant materials and unparalleled attention to detail, the machines of the Giotto range combine design, functionality, and cutting-edge technology. Completely "Made in Italy", they are the epitome of Italian aesthetic and industrial excellence.

		GIOTTO 11	GIOTTO 12	GIOTTO 21
TECHNICAL SPECIFICATIONS				
Number of flavors		1	1	2+1 mix
Control system	INCODIS 3.0	•	•	•
Freezing cylinder feed	Gravity	•	•	•
	Pump	•	•	•
Heat Treatment		•	•	•
Size (h x w x d)		780 x 300 x 764 mm	814 x 400 x 937 mm	799 x 540 x 785 mm
Weight		84 kg	120 kg	133 kg
Hopper capacity		6.5 L	18 L	2 x 6.5 L
Freezing cylinder capacity		1.5 L	3.2 L	2 x 1.5 L
PRODUCTIVE CAPACITY*				
Hourly production capacity		18 kg	33 kg	24 kg
POWER SUPPLY				
Phase		1~	1~ - 3~	1~
Hertz		50 - 60 Hz	50 - 60 Hz	50 - 60 Hz
Power		2500 W	2800 W	3500 W
REFRIGERATION SYSTEM				
Cooling	Air	•	•	•
	Water		Upon Request	
Number of compressors		1 x Hermetic	1 x Hermetic	1 x Hermetic

*Production capacity can be affected by ambient temperature, the mix used, and machine settings. The information provided is general; therefore, the specific release details should be verified. The manufacturer reserves the right to modify the specifications without prior notice.

FOR **FROZEN DRINKS** AND **MILKSHAKES**

Your **drink**, our **technology**.

Like the other machines in the Giotto range, this model ensures efficient production in a compact space, **enabling quick and easy dispensing of frozen beverages**. The gravity-fed version is ideal for slushies and frozen drinks, including alcoholic options, while the piston pump-fed version is particularly suitable for milkshakes, with the possibility of achieving a higher overrun.

PRODUCTS:

Frozen Drinks and Milkshakes



Models:
GIOTTO DR 14

Excellence in every detail

- **Advanced interface**
  All models are equipped with the INCODIS 3.0 interface, with a 7" touchscreen and remote management. Thanks to the intuitive display, controlling all functions has never been easier, allowing you to monitor and adjust the machine's performance in real time.
- **Freezing cylinder feed**
  Depending on the desired viscosity and overrun, it is possible to choose between two feeding systems: gravity-fed, which uses the force of gravity to transfer the mix, or piston pump-fed, for more precise control of the overrun.
- **Smart placement**
  Ergonomic and space-saving, this model is designed to offer maximum versatility.
  The bottom-to-top airflow system allows installation even in tight spaces, while its compact size makes placement easy in any commercial establishment.
- **Video tutorials**
  The advanced control system provides complete support for proper use. Video tutorials on the machine's touchscreen guide the operator through each operational procedure, ensuring it is performed correctly and easily.
- **Hygiene standards**
  The Heat Treatment function, through a thermal cycle of the mix in both the freezing cylinder and hopper, reduces the bacterial load and extends the product's lifespan. The Health Protocol technology, exclusive to the Giotto range, detects any contamination and halts production, requiring either the thermal cycle or cleaning as needed.
- **Unique identity**
  Built with resistant materials and unparalleled attention to detail, the machines of the Giotto range combine design, functionality, and cutting-edge technology. Completely "Made in Italy", they are the epitome of Italian aesthetic and industrial excellence.

		GIOTTO DR 14
TECHNICAL SPECIFICATIONS		
Number of flavors		1
Control system	INCODIS 3.0	•
Freezing cylinder feed	Gravity	•
	Pump	•
Heat Treatment		•
Size (h x w x d)		780 x 430 x 764 mm
Weight		100 kg
Hopper capacity		15 L
Freezing cylinder capacity		5.8 L
PRODUCTIVE CAPACITY*		
Hourly production capacity		66 L
POWER SUPPLY		
Phase		1~
Hertz		50 - 60 Hz
Power		2500 W
REFRIGERATION SYSTEM		
Cooling	Air	•
	Water	Upon request
Number of compressors		1 x Hermetic

*Production capacity can be affected by ambient temperature, the mix used, and machine settings. The information provided is general; therefore, the specific release details should be verified. The manufacturer reserves the right to modify the specifications without prior notice.

LAB
RANGE

POWER GEL | PASTRY GEL

Perfection in every dessert.

The **Lab range** is designed to **operate with precision, just like in a true pastry laboratory**, when it comes to creating single portions and **takeaway desserts**. Compact and versatile, these machines ensure impeccable viscosity of the dispensed product, efficiency, and ease of use, making them ideal for crafting high-quality pastry creations.







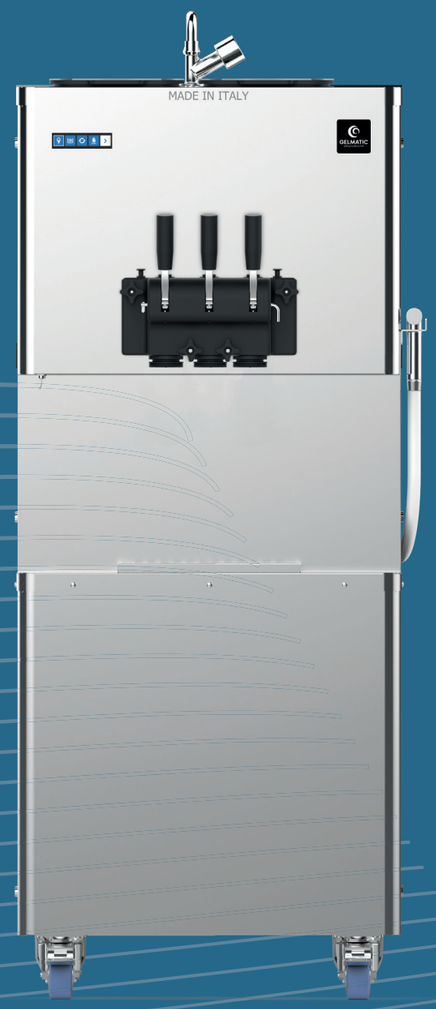

POWER GEL

The **power of performance**.

Perfect for **laboratory productions**, Power Gel range guarantees a well-structured soft serve, ideal for the **continuous production** of single portions or takeaway desserts. Compact and easy to position in any workspace, these machines offer multiple production possibilities. Equipped with accessories that simplify the filling process, they preserve the product's viscosity, from preparation to display and final consumption.

PRODUCTS:

Pastry Desserts

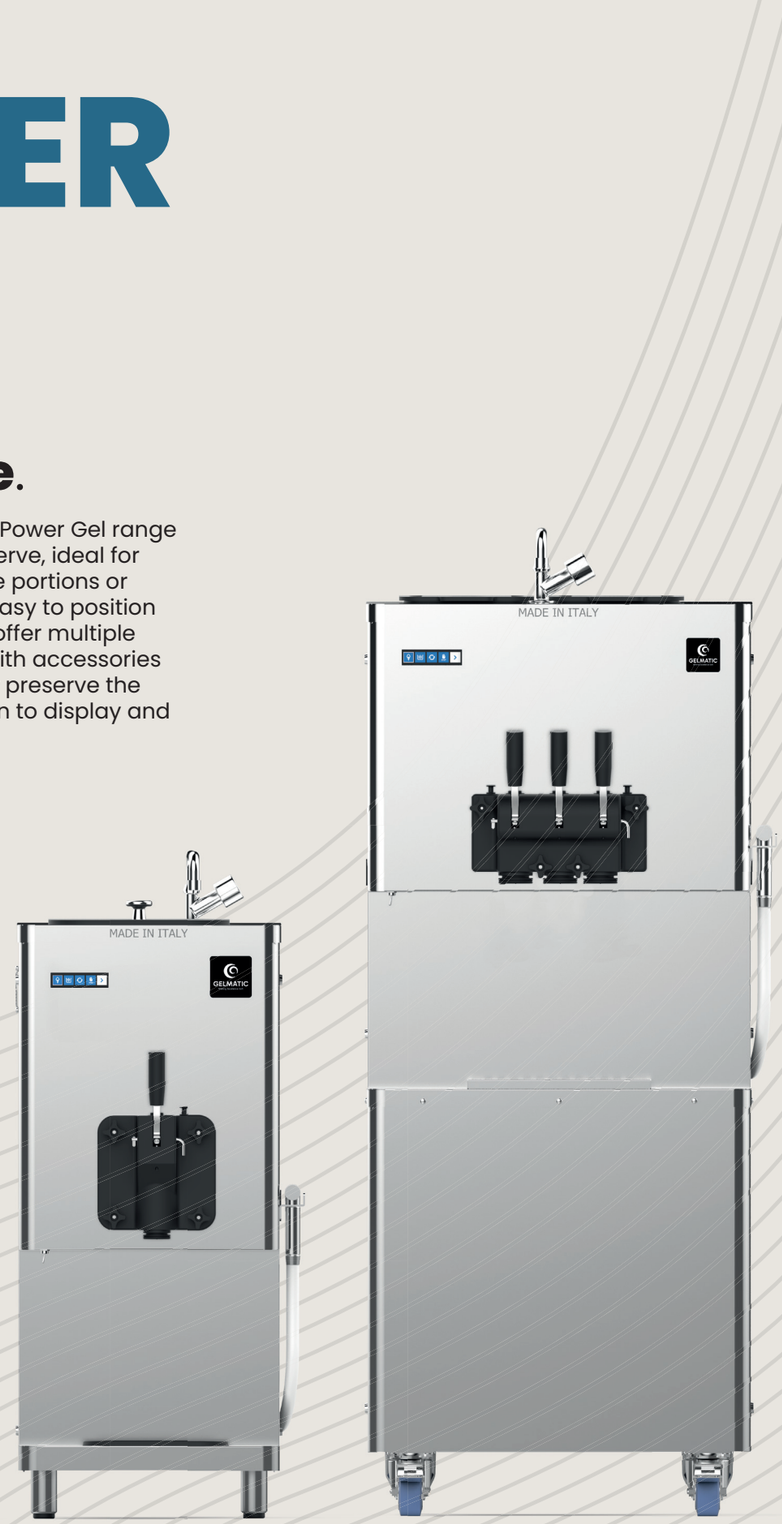

Models:
HC 1, XC 1, MV 2, HV 2

Excellence in every detail

- **Evolved control system**
  ECOS, equipped with a capacitive LCD display for intuitive and easy-to-use control.
- **Production system**
  The gear pump system can be customized, thanks to three regulators, to vary the overrun percentage in the dispensed product.
- **Refrigerated hoppers**
  Large hoppers with capacities ranging from 15.5 to 22 liters. The level sensors indicate when top-ups are needed to facilitate continuous production. The integrated agitator prevents the separation of the solid and liquid parts, ensuring the uniformity and homogeneity of the mix.
- **High-efficiency freezing cylinders**
  Direct-expansion stainless steel freezing cylinders ensure fast, uninterrupted production while maximizing efficiency.
- **Modern and compact design**
  Essential lines that facilitate cleaning and provide a wide workspace for dispensing with maximum comfort.
- **Versatile extruders**
  A wide range of adaptable extruders allows easy filling of molds and containers.
- **Cleaning kit**
  The integrated faucet on the hopper top accelerates the cleaning process and the replacement of flavors.

		POWER GEL HC 1	POWER GEL XC 1	POWER GEL MV 2	POWER GEL HV 2
TECHNICAL SPECIFICATIONS					
Number of flavors		1	1	2+1 mix	2+1 mix
Control system	ECOS	•	•	•	•
Freezing cylinder feed	Pump	•	•	•	•
Size (h x w x d)		1042 x 450 x 850 mm	1134 x 450 x 856 mm	1633 x 640 x 833 mm	1633 x 640 x 955 mm
Weight		165 kg	160 kg	305 kg	316 kg
Hopper capacity		22 L	22 L	2 x 15.5 L	2 x 22 L
Freezing cylinder capacity		3.5 L	7.8 L	2 x 2.6 L	2 x 3.5 L
PRODUCTIVE CAPACITY*					
Hourly production capacity		38 kg	54 kg	56 kg	84 kg
POWER SUPPLY					
Phase		3~	3~	3~	3~
Hertz		50 - 60 Hz	50 - 60 Hz	50 - 60 Hz	50 - 60 Hz
Power		3750 W	3950 W	6100 W	6900 W
REFRIGERATION SYSTEM					
Cooling	Air			•	•
	Water	•	•	•	•
Number of compressors		1 x Semi-hermetic	1 x Semi-hermetic	2 x Semi-hermetic	2 x Semi-hermetic

*Production capacity can be affected by ambient temperature, the mix used, and machine settings. The information provided is general; therefore, the specific release details should be verified. The manufacturer reserves the right to modify the specifications without prior notice.

PASTRY GEL

Designed to shape **the sweetest dreams**.

Designed for **frozen pastry desserts**, the Pastry Gel range transforms any workspace into a versatile production hub. Equipped with an innovative flexible-hose dispenser and an advanced continuous production system, it enables the creation of countless products— such as popsicles, ice cream sandwiches, cakes, single portions, and semifreddos— **all with a smooth, creamy texture**. Compact, ergonomic, and efficient, this range is ideal for easily creating single portions or other frozen desserts.

PRODUCTS:

Pastry Desserts



Models:
HC 1, XC 1

Excellence in every detail

- **High performance**
  A 22-liter hopper ensures continuous production without the need for frequent top-ups. It is equipped with a level sensor and agitator.
- **High-efficiency freezing cylinder**
  The direct-expansion stainless steel freezing cylinder provides superior texture, rapid production, and energy savings.
- **Ease of use and management**
  The 100% stainless steel gear pump ensures precise overrun control, easy cleaning, and efficient operation.
- **Advanced control system**
  INCODIS 2.0 offers intuitive control, allowing you to monitor and optimize machine performance.
- **Ergonomics**
  The flexible hose dispenser allows easy filling of molds and containers of any shape and size.
- **Modern and compact design**
  Essential lines that facilitate cleaning and provide a wide workspace for dispensing with maximum comfort.
- **Cleaning kit**
  The integrated faucet on the hopper top accelerates the cleaning process and the replacement of flavors.

		PASTRY GEL HC 1	PASTRY GEL XC 1
TECHNICAL SPECIFICATIONS			
Number of flavors		1	1
Control system	INCODIS 2.0	•	•
Freezing cylinder feed	Pump	•	•
Size (h x w x d)		1042 x 450 x 828 mm	1134 x 450 x 842 mm
Weight		145 kg	160 kg
Hopper capacity		22 L	22 L
Freezing cylinder capacity		3.5 L	7.8 L
PRODUCTIVE CAPACITY*			
Hourly production capacity		57 kg	70 kg
POWER SUPPLY			
Phase		1~ - 3~	1~ - 3~
Hertz		50 - 60 Hz	50 - 60 Hz
Power		1950 W	2500 W
REFRIGERATION SYSTEM			
Cooling	Air	•	•
	Water	•	•
Number of compressors		1 x Hermetic	1 x Hermetic

*Production capacity can be affected by ambient temperature, the mix used, and machine settings. The information provided is general; therefore, the specific release details should be verified. The manufacturer reserves the right to modify the specifications without prior notice.

COMBI RANGE

One range, **endless possibilities**.

The Combi range is the ideal solution for **chain restaurants** that **offer a wide variety of desserts**, such as milkshakes, sundaes, waffles, and more. Available in compact models with one or two high-capacity freezing cylinders, it guarantees **impeccable results**. The separate management of each circuit ensures optimal viscosity and production for each product type, while the dedicated dispensing blocks allow you to garnish the product with four different syrups, offering endless flavor possibilities.



PRODUCTS:

Soft Serve

Frozen Drinks and Milkshakes

Models:
SHG-M 150, SHG-M 250

Excellence in every detail

- **Intuitive control system**
  The INCODIS 2.0 touchscreen ensures easy-to-use management, from dispensing to activating the thermal cycle of the mix (Heat Treatment).
- **Agitator with adjustable speed**
  An adjustable-speed agitator ensures a smooth, consistent texture.
  The standard Powder Fill System technology allows the preparation of the mix directly in the hopper.
- **Heat Treatment**
  The Heat Treatment function, through a thermal cycle of the mix, reduces bacterial load and extends the product's lifespan.
- **Gear pump**
  A 100% stainless steel gear pump with precise overrun control, designed for easy removal and cleaning.
- **Efficient freezing cylinders**
  High-capacity stainless steel freezing cylinders that deliver reliable performance to meet all production demands.
- **Smart dosing for customized milkshakes**
  The automatic cup filling system is equipped with level sensors and operates in combination with a compressed air system for syrup dosing.
- **Ergonomic and energy-efficient design**
  All components are optimized to ensure high performance with minimal energy consumption, while the swivel casters with brakes allow easy positioning.

		SHG-M 150	SHG-M 250
TECHNICAL SPECIFICATIONS			
Number of flavors		1 soft serve or 5 shakes	1 soft serve + 5 shakes
Control system	INCODIS 2.0	•	•
Freezing cylinder feed	Pump	•	•
Heat Treatment		•	•
Size (h x w x d)		1618 x 500 x 1021 mm	1618 x 735 x 1091 mm
Weight		293 kg	493 kg
Hopper capacity		20 L	2 x 22 L
Freezing cylinder capacity	Soft serve / Shake	2.6 L	7.8 / 2.6 L
PRODUCTIVE CAPACITY*			
Hourly production capacity (soft serve)		28 kg	27 kg
Hourly production capacity (shakes)		65 L	72 L
POWER SUPPLY			
Phase		3~	3~
Hertz		50 - 60 Hz	50 - 60 Hz
Power		6000 W	6150 W
REFRIGERATION SYSTEM			
Cooling	Air	•	•
	Water	•	•
Number of compressors		1 x Semi-hermetic	2 x Semi-hermetic

*Production capacity can be affected by ambient temperature, the mix used, and machine settings. The information provided is general; therefore, the specific release details should be verified. The manufacturer reserves the right to modify the specifications without prior notice.

AUTOMATIC RANGE

Precise technology, **consistent** excellence.

The exclusive technology of this range enables the use of the various models **in self-service settings, through automatic, operator-free dispensing**. The machines are **compatible with cups and cones of different sizes**, while the **advanced software ensures precise and consistent servings**. An integrated indicator light signals any errors or mix depletion, guaranteeing consistency, efficiency, and performance.

PRODUCTS:

Self Service

Models:
SELF GEL 1 UP, SELF GEL 1 KOLOR UP



Excellence in every detail

- **Advanced control system**
  INCODIS 2.0 features a 10.1" high-definition touchscreen that simplifies the dispensing process with intuitive icons and customizable graphics (images, videos, and language selection).
  It provides access to detailed diagnostics and reports, such as portion counts, to obtain comprehensive performance data.
- **Token/Coin dispensing**
  An integrated system allows production to start by inserting a token or coin.
- **Hygiene**
  The Heat Treatment function ensures hygiene levels through a thermal cycle applied to the mix, reducing bacterial load and the frequency of cleaning operations. The plexiglass panels and the lockable lid provide additional protection, preserving product quality and customer safety.
- **Durability and ease of cleaning**
  The stainless steel panels undergo a special coating treatment that ensures greater durability and easy removal of dirt.

		SELF GEL 1 UP	SELF GEL 1 KOLOR UP
TECHNICAL SPECIFICATIONS			
Number of flavors		1	1+3 ripples
Control system	INCODIS 2.0	•	•
Freezing cylinder feed	Pump	•	•
Heat Treatment		•	•
Size (h x w x d)		898 x 456 x 755 mm	1626 x 456 x 797 mm
Weight		150 kg	210 kg
Hopper capacity		13 L	13 L
Freezing cylinder capacity		1.7 L	1.7 L
PRODUCTIVE CAPACITY*			
Hourly production capacity		22 kg	22 kg
POWER SUPPLY			
Phase		1~ - 3~	1~ - 3~
Hertz		50 - 60 Hz	50 - 60 Hz
Power		2600 W	2600 W
REFRIGERATION SYSTEM			
Cooling	Air	•	•
	Water	•	•
Number of compressors		1 x Hermetic	1 x Hermetic

*Production capacity can be affected by ambient temperature, the mix used, and machine settings. The information provided is general; therefore, the specific release details should be verified. The manufacturer reserves the right to modify the specifications without prior notice.

FANTASY RANGE

Experience color. Taste **perfection**.

MV EASY 2 KOLOR is a twin-flavor machine with a dedicated dispensing block that allows you to add three different ripples. A stainless-steel cabinet stores the three syrup containers, and pressure control makes it easy to adjust the amount. Thanks to the advanced cooling technology of the two freezing cylinders, perfect viscosity is guaranteed with every serving. Compact and easy to use, it is **ideal for offering varied and eye-catching soft serves, even in limited spaces.**



PRODUCTS:

- Soft Serve
- Frozen Yogurt

Models:
MV EASY 2 KOLOR

Excellence in every detail

- **Multiple flavors in one compact space**
  A diverse flavor offering with three different variegation options.
- **Easy-to-use control system**
  The intuitive ECOS system ensures quick and precise management of machine settings.
- **High-efficiency freezing cylinders**
  High-performance stainless steel freezing cylinders with direct expansion ensure fast, energy-saving production.
- **Gear pump**
  Equipped with a stainless steel gear pump with overrun precision control, easy to disassemble and clean.
- **High-capacity hoppers**
  Each hopper is refrigerated and equipped with an agitator and a level sensor to keep the mix uniform for optimal results.
- **Ventilation**
  The air-cooled version is designed to expel heat upwards, allowing installation anywhere, even against walls.

		MV EASY 2 KOLOR
TECHNICAL SPECIFICATIONS		
Number of flavors		2+3 ripples
Control system	ECOS	•
Freezing cylinder feed	Pump	•
Size (h x w x d)		1540 x 600 x 895 mm
Weight		295 kg
Hopper capacity		2 x 17 L
Freezing cylinder capacity		2 x 2.6 L
PRODUCTIVE CAPACITY*		
Hourly production capacity		58 kg
POWER SUPPLY		
Phase		3~
Hertz		50 - 60 Hz
Power		4000 W
REFRIGERATION SYSTEM		
Cooling	Air	•
	Water	•
Number of compressors		1 x Semi-hermetic

*Production capacity can be affected by ambient temperature, the mix used, and machine settings. The information provided is general; therefore, the specific release details should be verified. The manufacturer reserves the right to modify the specifications without prior notice.

CUSTOMIZE YOUR GELMATIC

For a look that doesn’t go unnoticed.

Our product ranges are designed to fit perfectly into your space and style, offering the possibility to customize a service that reflects your uniqueness and meets every need, from taste to presentation. The machine becomes an integral part of the experience, thanks to a customizable design that adapts to each user’s personal taste and aesthetic preferences.



Layout

Customize the machine with graphics, colors, and logos by choosing from our available options or by using your own custom design. A distinctive touch that enhances your brand image and transforms the machine in an effective visual communication tool.

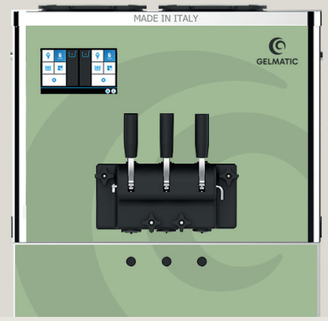

Dispensing door

The dispensing door is available in white, black, or transparent, adding character to the machine and making it stand out at the point of sale. An aesthetic detail that combines functionality and style.



Nozzles

The dispensing door comes with nozzles available in various shapes to serve ice cream in the desired form (for example: round, 6-pointed star, and 8-pointed star).

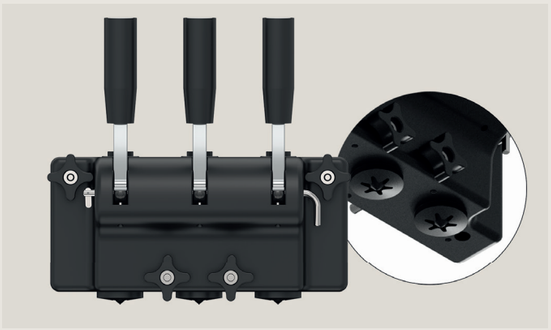

Contact your sales representative regarding the compatibility with the specific model you are interested in.

ENHANCE FUNCTIONALITY

Accessories available

Gelmatic accessories are designed to enhance your machine's performance by simplifying daily tasks and optimizing every operation at the point of sale. This ensures greater efficiency and service quality, especially from a hygiene perspective.

Kit pastry

Special elongated stainless steel extruder, ideal for filling molds and single portions.

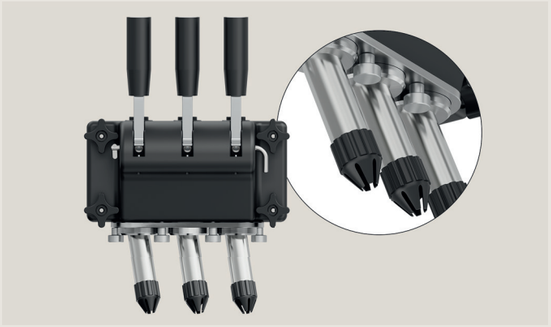

Faucet

The faucet can be positioned on the hopper top to facilitate both cleaning procedures and flavor replacements.



Automatic return system

After each dispensing, the handle automatically returns to its starting position to prevent unintentional product spillage. An accessory designed to ensure both safety and efficiency.

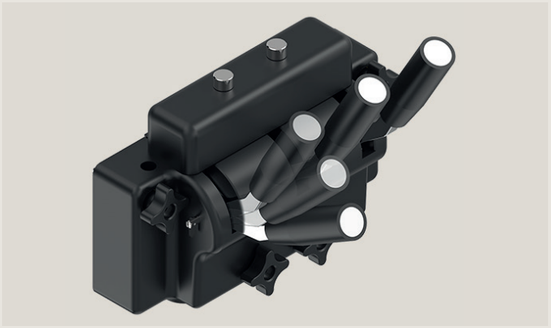

Stainless steel cart with swivel and lockable casters

Sturdy stainless steel cart, equipped with swivel and lockable casters for easy machine maneuverability and stability. Ideal for ensuring practicality and safety when moving the unit for cleaning and sanitizing. Also available in a closed version with front doors.



Contact your sales representative regarding the compatibility with the specific model you are interested in.

NOTES

GELMATIC

GELMATIC ITALIA S.R.L.
Via Zanica 6 C, 24050 Grassobbio (BG) - Italy
www.gelmatic.com

EN – 2025 – v.01